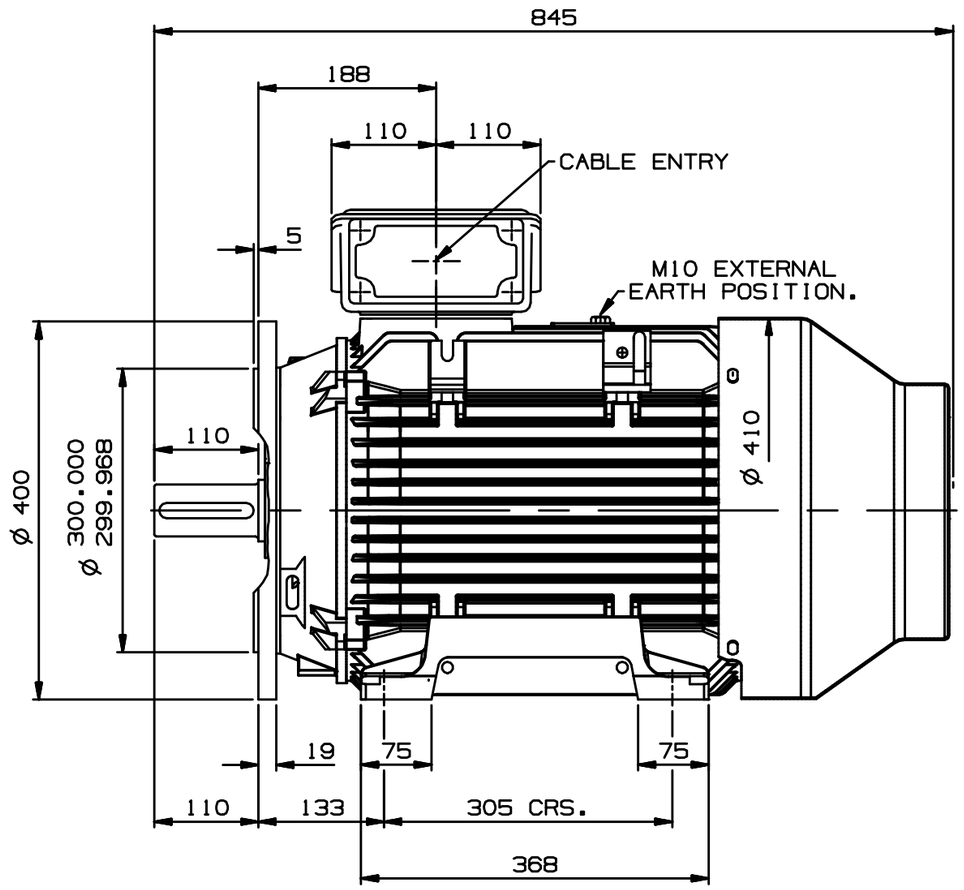

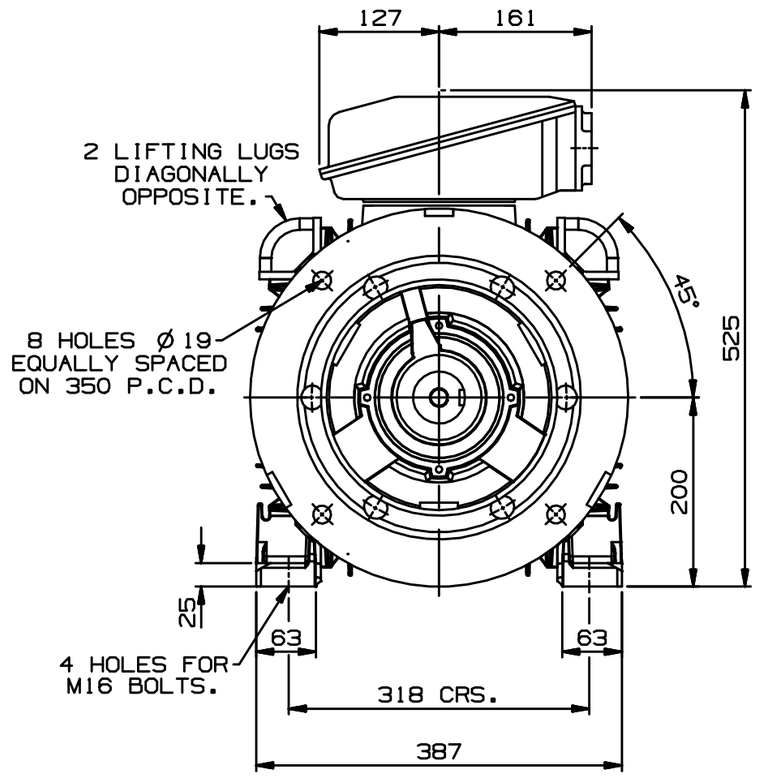

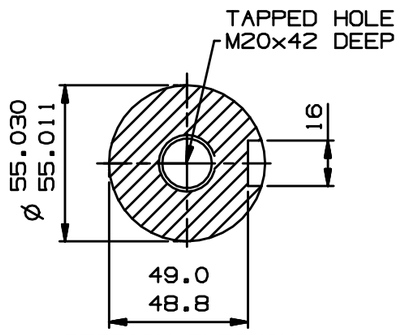

SECTION THROUGH
SHAFT EXTENSION
(SCALE 1:2.)

NOTE: TERMINAL BOX CAN BE MOUNTED (LEFT OR RIGHT) BY REFITTING FEET AND LIFTING LUGS 90° IN APPROPRIATE DIRECTIONS. CABLE ENTRY CAN BE SUPPLIED IN ANY ONE OF FOUR POSITIONS AT 90° INTERVALS.

CUSTOMER		
ORDER No.		
SERIAL No.		
ITEM No.		
FRAME SIZE		
KW	R.P.M.	
Hz	PHASE 3	
VOLTS	POLES	
BRGS. D.E		N.D.E
MOTOR NETT. WT.		Kg.
INSULATION CLASS		
TEMPERATURE RISE °C		
DESIGN AMBIENT TEMPERATURE °C		
HEATER WATTS & VOLTS (IF FITTED) WATTS, VOLTS		
REMARKS		

ALL DIMENSIONS IN MILLIMETRES

FIRST ANGLE PROJECTION

BROOK CROMPTON

Large Industrial Motors
GUISELEY, LEEDS, LS20 9NZ.

NOTE!
2.5 ENDPLAY WILL BE PROVIDED FOR ENDTHRUST PROTECTION WHEN CUSTOMERS NOTIFY US OF THEIR INTENTION TO USE RIGID COUPLINGS AND DRIVEN MACHINES WITHOUT ENDPLAY.

OUTLINE DIMENSIONS OF STANDARD FOOT/FLANGE MOUNTED METRIC A.C. MOTOR. TOTALLY ENCLOSED FAN VENTILATED. ENDSHIELD ADAPTOR AT DRIVE END TO DIN STANDARDS. FRAME SIZE: W-DF200LF-H (ALL POLES.)

SCALE	1:7	DATE
DRAWN	S.T	26.3.98
CHECKED	M.B.C	26.3.98
APPROVED	M.B.C	26.3.98

DRG. No. M21173

REVISION: C M.E DATE 23.2.04